Typical Commuter Rail Cross Sections

Communter Rail Station
Single Track Side Platform

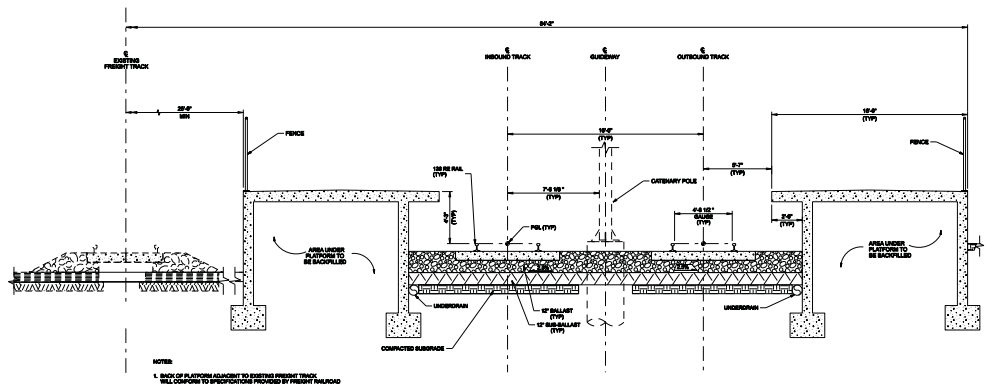

Commuter Rail Station
Tangent Section Along an Existing Road

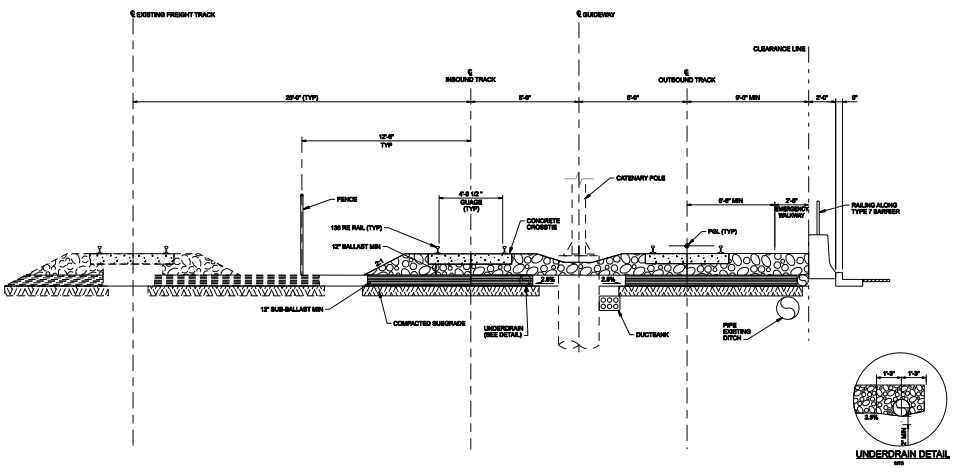

Commuter Rail Station
Single Track Side Platform

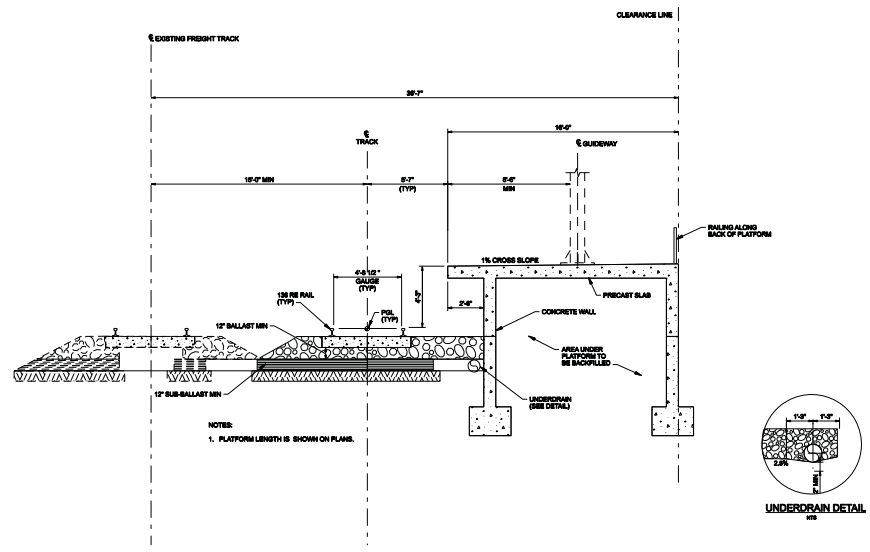

Commuter Rail Station – Center Platform

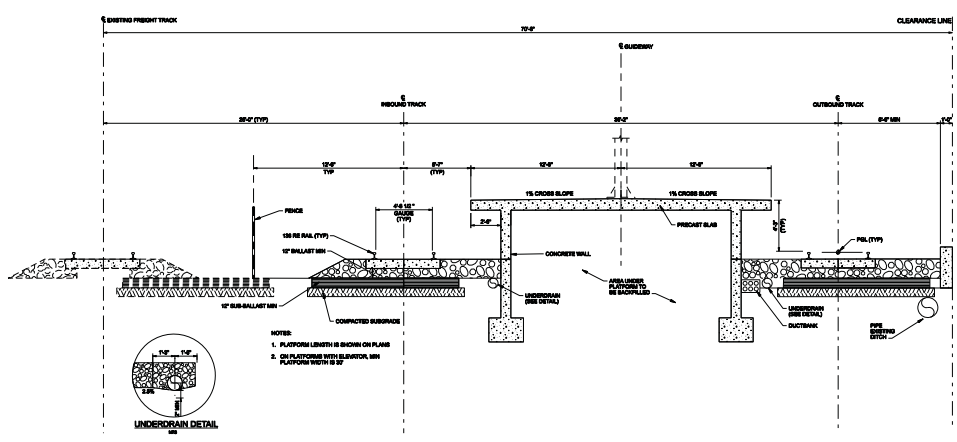

Commuter Rail – Single Track Section

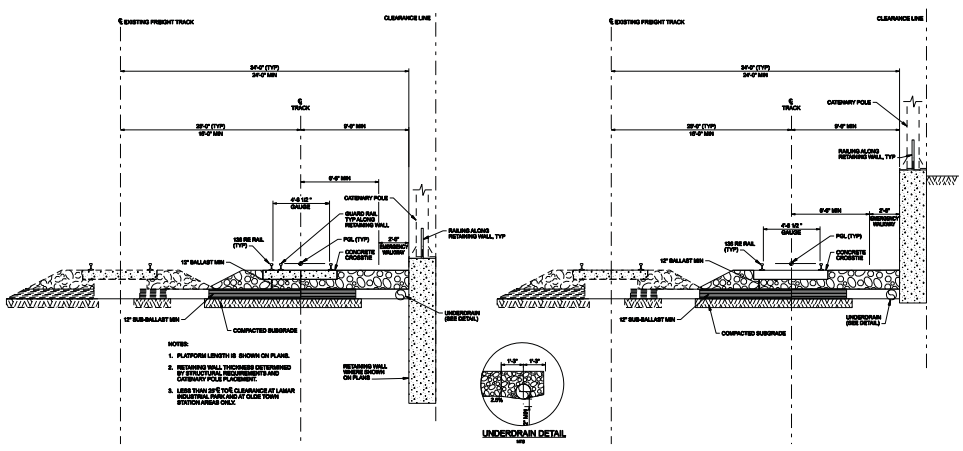

goldline

RTD FASTTRACKS

RTD